PACKING LIST
3RD FUNCTION VALVE ROPS KIT
(7J066-94000 B7368 LA535 3RDFCVKR)

Refer to the assembly instructions included in the front loader kit when assembling this kit. However, if equipped with backhoe, see "ASSEMBLE WITH BACKHOE" on this sheet.

■ Parts List

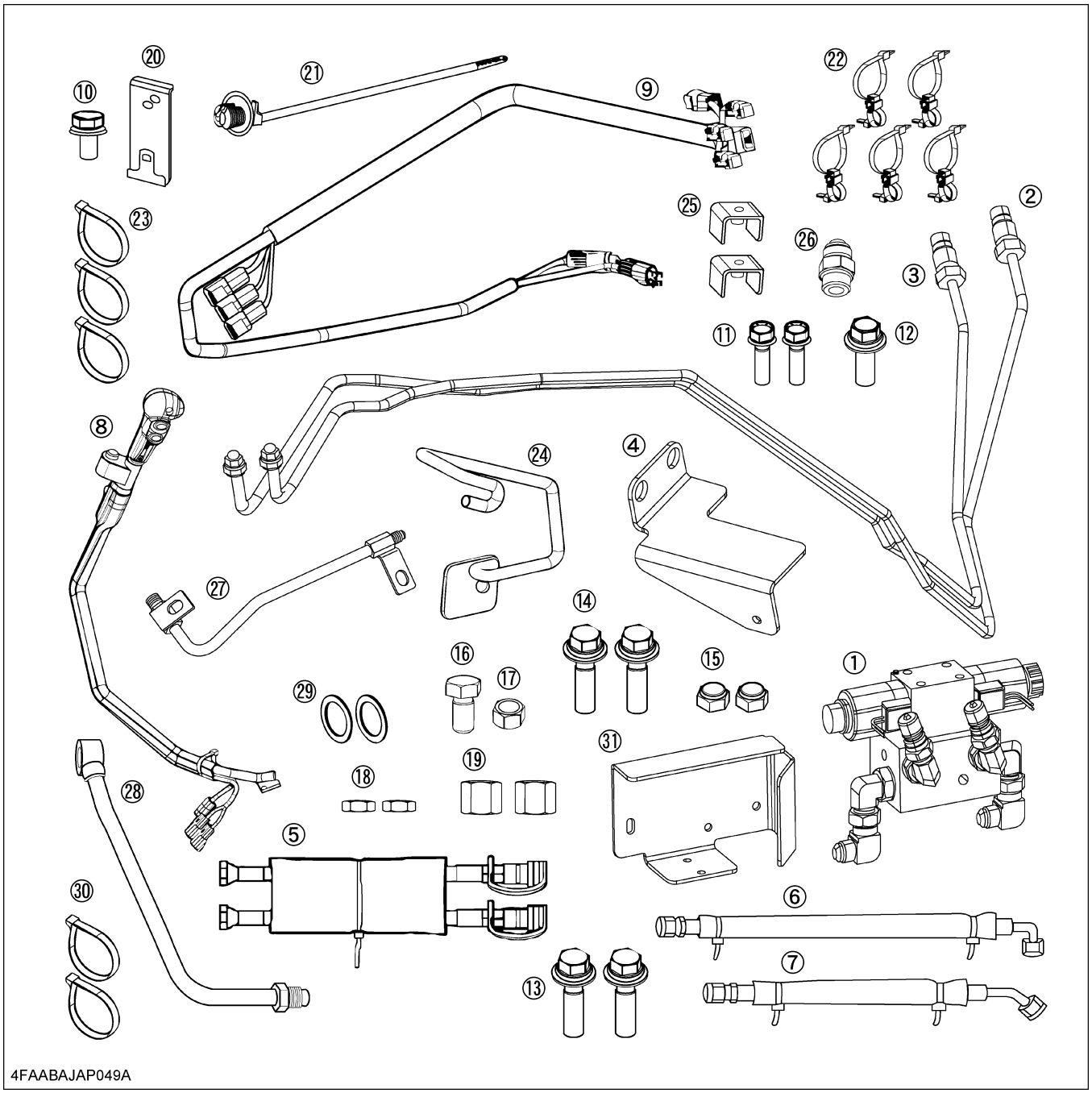

REF. No.	PART No.	PART NAME	Q'TY	REMARKS
1	-	VALVE, ASSY	1	
2	7J066-8411-0	TUBE (HYDRAULIC, 3RD, 1)	1	Black mark
3	7J066-8412-0	TUBE (HYDRAULIC, 3RD, 2)	1	Green mark
4	7J056-8443-0	STAY (COUPLER)	1	
5	-	HOSE, ASSY (3RD, LOADER SIDE)	1	1422 mm
6	-	HOSE, ASSY (3RD. IN)	1	1130 mm
7	-	HOSE, ASSY (3RD. PB)	1	1030 mm
8	-	LEVER, ASSY (CONTROL, 3RD)		
9	-	WIRE HARNESS, ASSY (3RD, ROPS)		
10	01025-50612	BOLT	1	M6 x 1 x 12
11	01023-50625	BOLT, SEMS	2	M6 x 1 x 25
12	01125-50830	BOLT, W SEMS	1	M8 x 1.25 x 30
13	01133-51025	BOLT, SEMS	2	M10 x 1.25 x 25
14	01133-51045	BOLT, SEMS	2	M10 x 1.25 x 45
15	02574-50100	NUT, LOCKING	2	M10 x 1.25
16	01073-51630	BOLT	1	M16 x 1.5 x 30
17	02174-50160	HEX. NUT	1	M16 x 1.5
18	75599-3104-8	HEX. JAM NUT 3/4-16 UNF-2B GR 5	2	3/4-16 UNF
19	7J056-6480-0	CAP (3/8-18 NPTF)	2	3/8-18 NPTF
20	7J066-8414-0	STAY (RELAY)	1	
21	7J065-8412-0	CLAMP (CORD)	1	
22	RP421-5415-0	CLAMP (7247-3133-30)	5	
23	53581-6415-0	BAND, CORD	3	
24	7J066-9501-0	GUIDE (HOSE)	1	
25	7J066-8442-0	CLAMP (TUBE, 1)	2	
26	75580-6180-0	ASSY, ADAPTER 1	1	
27	7J056-8424-0	TUBE (PB, BH)	1	
28	7J056-8430-0	TUBE (PB, FL)	1	
29	67111-3718-0	GASKET	2	
30	75590-6465-0	BAND, CORD	2	
31	7J066-8465-0	STAY (3RD, VALVE)	1	
32	7J066-9970-2	LIST (PACKING, 3RD-R)	1	This sheet

ASSEMBLE WITH BACKHOE

■ Loader Side Section

Assemble following the assembly instructions included in the front loader kit.

◆ Hose guide

Assemble following the assembly instructions included in the front loader kit.

◆ 3rd Function Valve section

Assemble following the assembly instructions included in the front loader kit.

◆ 3rd Function Hydraulic Line

[Equipped with backhoe]

If the backhoe kit has been equipped, disconnect the backhoe inlet pipe first and then remove the female coupler and dust plug.

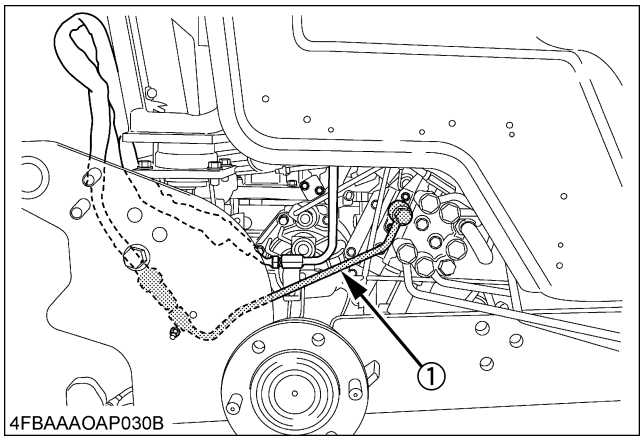

(1) Backhoe inlet pipe (Disconnect)

NOTE :

- The removed female coupler and dust plug will be used again for the power beyond pipe.

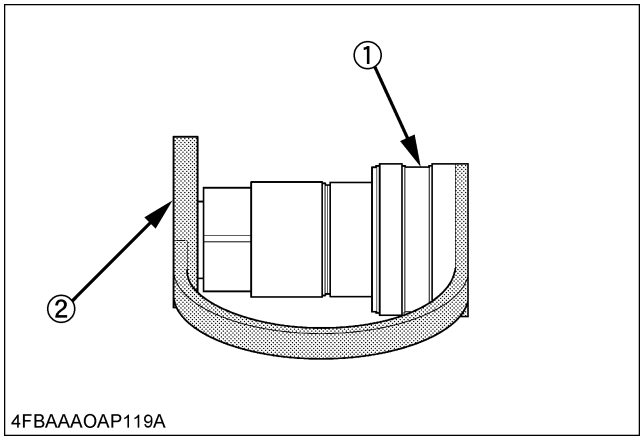

(1) Female coupler
(2) Dust plug

Use the following kit parts as shown below.

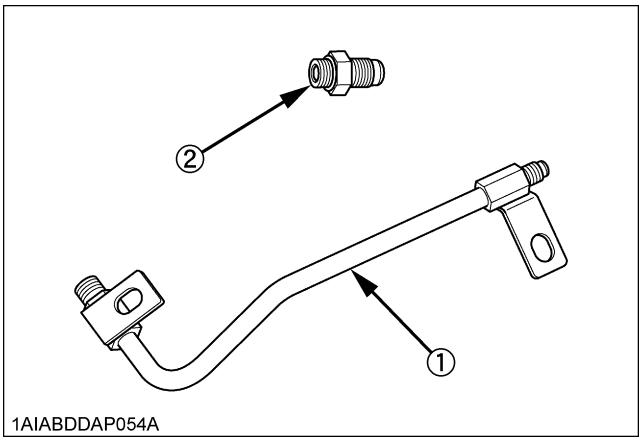

(1) Power beyond pipe
(2) Adapter

1. Disconnect the front loader power beyond pipe if equipped.

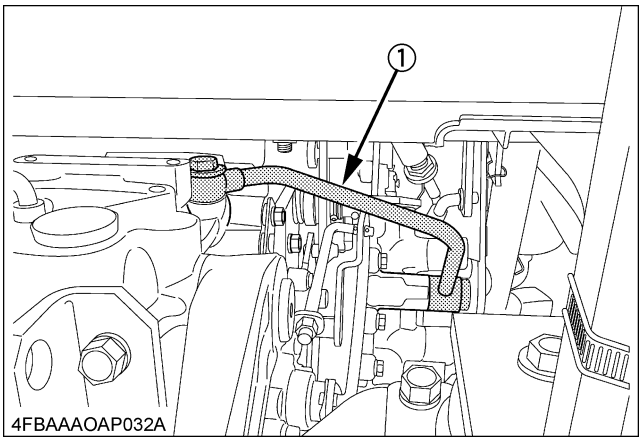

(1) Front loader power beyond pipe

2. Connect the adapter.

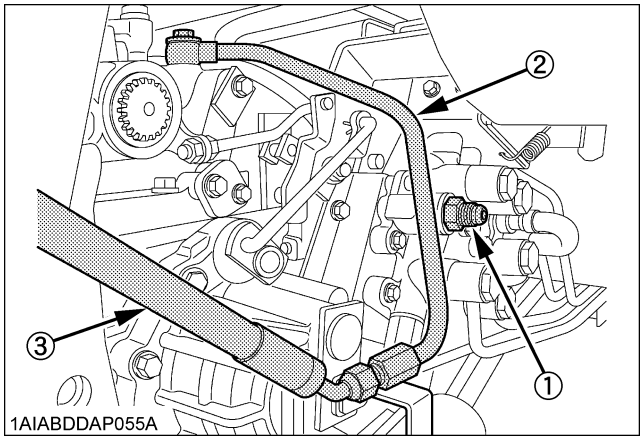

(1) Adapter
(2) Backhoe outlet pipe (in the backhoe kit)
(3) Backhoe outlet hose (in the backhoe kit)

No.	Size	Tightening torque
(1)	3/4	48 to 54 N•m (4.9 to 5.5 kgf•m) (35 to 40 lbf•ft)

NOTE :
- Refer to the backhoe assembly instructions for the backhoe outlet pipe and backhoe outlet hose.

3. Attach the female coupler and dust plug to the power beyond pipe. At this time, use the removed female coupler and dust plug.

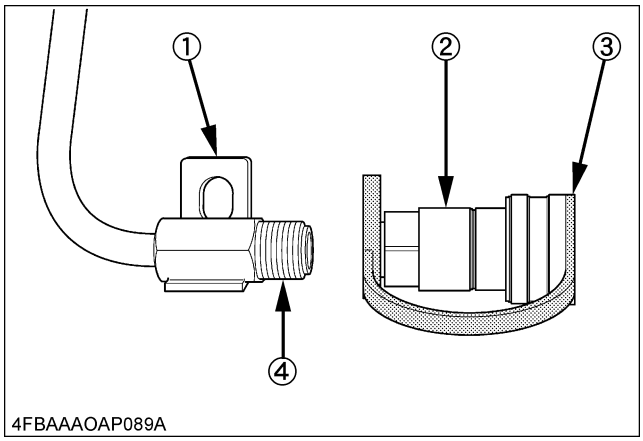

(1) Power beyond pipe
(2) Female coupler (in the backhoe kit)
(3) Dust plug (in the backhoe kit)
(4) Sealing tape

Tightening torque	39 to 60 N•m (3.9 to 6.1 kgf•m) (29 to 44 lbf•ft)

4. Connect the inlet hose to the adapter and connect the outlet hose to the power beyond pipe respectively.

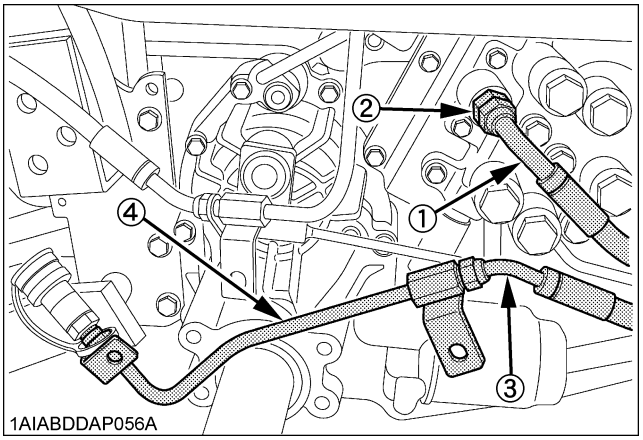

(1) Inlet hose
(2) Adapter
(3) Outlet hose
(4) Power beyond pipe

No.	Size	Tightening torque
(1)	3/4	49 to 53 N•m (5.00 to 5.40 kgf•m) (36.2 to 39.0 lbf•ft)
(3)	9/16	25 to 28 N•m (2.55 to 2.85 kgf•m) (18.5 to 20.6 lbf•ft)

5. Secure the power beyond pipe with the backhoe sub frame and connecting plate.

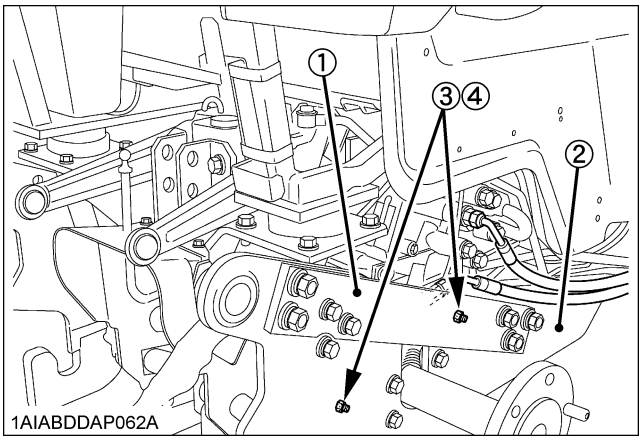

(1) Connecting plate
(2) Sub frame
(3) 2-M8 x 30 bolts
(4) 2-M8 nuts

No.	Size	Tightening torque
(4)	M8	23.6 to 27.4 N•m (2.4 to 2.8 kgf•m) (17.4 to 20.2 lbf•ft)

6. Connect the hoses to the adapters of 3rd function assembly.

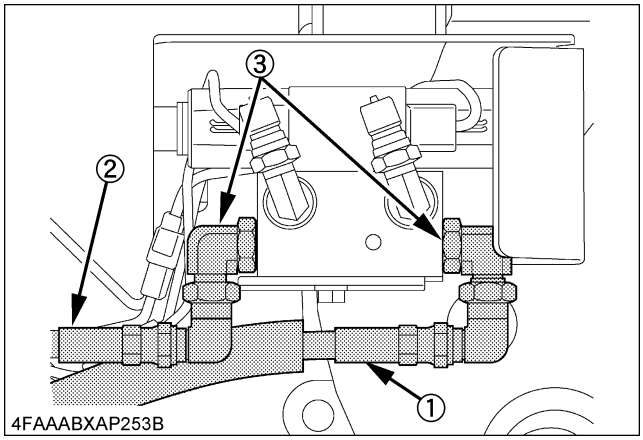

(1) Inlet hose
(2) Outlet hose
(3) 2-Adapters

No.	Size	Tightening torque
(1) (2)	3/4	49 to 53 N•m (5.00 to 5.40 kgf•m) (36.2 to 39.0 lbf•ft)

7. Secure the inlet hose and outlet hose with the band as shown below.

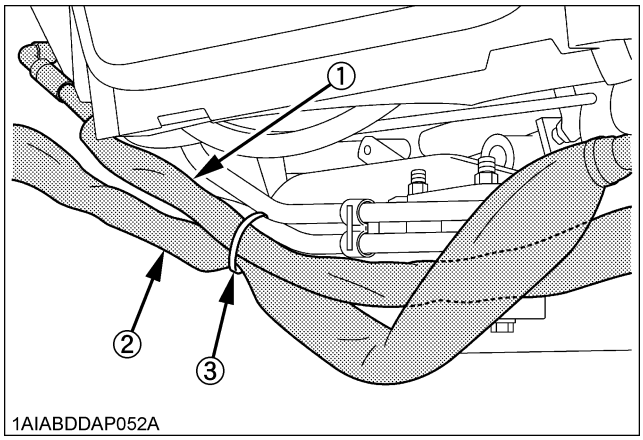

(1) Inlet hose
(2) Outlet hose
(3) Band

■ Tractor Side/CAB Section

Assemble following the assembly instructions included in the front loader kit.

■ Tractor Side/ROPS Section

Assemble following the assembly instructions included in the front loader kit.